NO./编号	DESCRIPTION/修改说明	DATE/日期
1	First Release/第一版本	2023-06-13

客户确认签名/
APPR. BY Customer

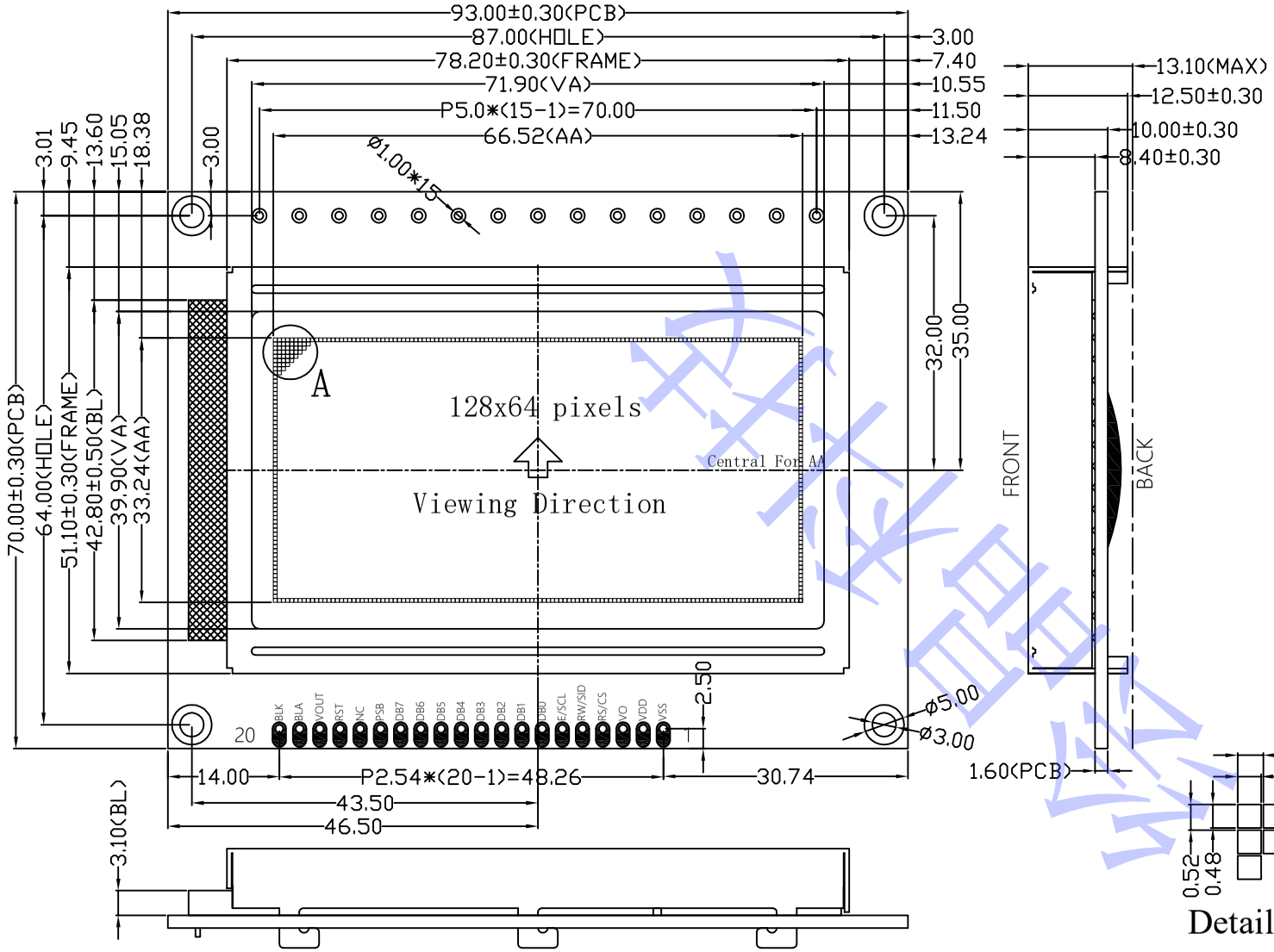

Block Diagram

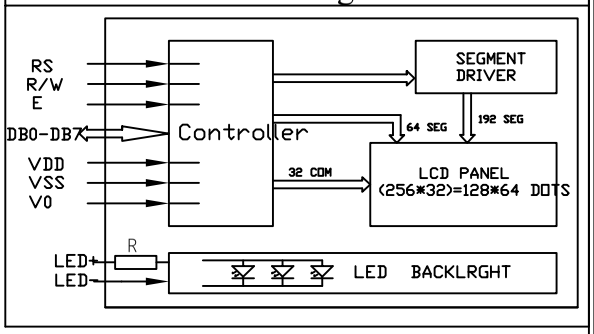

PIN ASSIGNMENT:		
1	VSS	Ground
2	VDD	Power Supply
3	VO	Default NC/Contrast Adjustment Inpu
4	RS(CS*)	Parallel Mode:Register select. Serial mode: Chip select.
5	RW(SID*)	Parallel Mode: Read/Write control. Serial Mode: Sserial data input.
6	E(SCLK*)	Parallel Mode: 1: Enable trigger. Serial Mode: Serial clock.
7	DB0	DATA BUS
8	DB1	DATA BUS
9	DB2	DATA BUS
10	DB3	DATA BUS
11	DB4	DATA BUS
12	DB5	DATA BUS
13	DB6	DATA BUS
14	DB7	DATA BUS
15	PSB	0:serial mode;1:8/4-bit parallel bu
16	NC	No connection
17	RST	Reset signal.
18	VOUT	Default NC/Power supply for LCD
19	BLA	Backlight anode.(+)
20	BLK	Backlight cathode.(-)

项目/ITEM	参数/PARAMETERS	项目/ITEM	参数/PARAMETERS
OPERATING VOLTAGE	5.0V	OPERATING TEMP	-20°C ~ 70°C
OPERATING CURRENT	MAX:10.0MA(WITHOUT BL)	STORAGE TEMP	-30°C ~ 80°C
LCD DRIVE VOLTAGE	4.8± 0.20V(VO-VSS / TBD)	BACKLIGHT	3 LEDS,45MA(TYP.),VLED=5.0V,WHITE
DISPLAY MODE	STN(BLUE) ,NEGATIVE,TRANSMISSIVE	ROHS STANDARD	YES ■ NO □
LCD DRIVE METHOD	DUTY: 1/32; BIAS: 1/6	CONNECTION	HOLE
Controller/Driver	ST7920 & ST7921*2 or EQV.	UNSPECIFIED	± 0.2mm
VIEW DIRECTION	6:00 O'CLOCK	Third perspective	

HUIJING

深圳市绘晶科技有限公司
Shenzhen huijing Technology Co. Ltd.

DRAWN/设计	LM	NAME/名称	COB工程图
CHECKED/检查	ZPF	MODEL NO./型号	12864ZW-14
APPROVED/批准	YXS	REV./版本	V1.0
TEL/电话	0755-23146001	DATE/日期	2023-06-13
FAX/传真	0755-23146002	URL/网址	http://www.huijinglcm.com/
Address/地址	深圳市光明新区公明街道红星社区星工一路26号 No.26,Xinggong Road, Hongxing Community, Gongming Street, Guangming New District, Shenzhen		